WENDELIGHTING®

DIVISION OF JACKSEN INTERNATIONAL LTD

2346H2CPM
Bottom Access Housing

The housing provides bottom access to the Wendel® projector for installation, relamping and focusing. A top access panel provides the option for servicing above ceiling. Each housing comes prewired with a large, accessible junction box. Each complies with Underwriters Labratory requirements for Non-IC installations.

The trim plate plaster flange adjusts vertically, accommodating plaster ceiling thicknesses ranging from ½" to 1 ½". The trim plate is installed flush to a plaster finish ceiling and field painted to match the ceiling finish. For overlap trim, contact Factory.
Wendel housings come with mounting hanger brackets for housing installation.
(Installation Instructions are included with each housing.)

How to Specify

Wendelighting shall specify housing location. Provide Wendelighting with a to-scale Reflected Ceiling Plan and Interior Elevation including art and/or maximum art size, or complete the Wendel Projector Specification Workseet which can be found at *www.wendelighting.com*. Staff members are also available for jobsite consultation on a fee basis.

DISCONTINUED

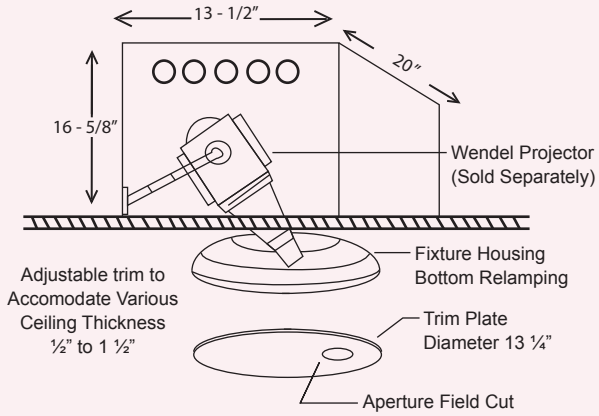

2346H2CPM Housing (250 Watt)
13 ½" Wide x 16 ⅝" Tall x 20" Long
(Length excluding attached J-Box)

Projector not included. Refer to Model 2346

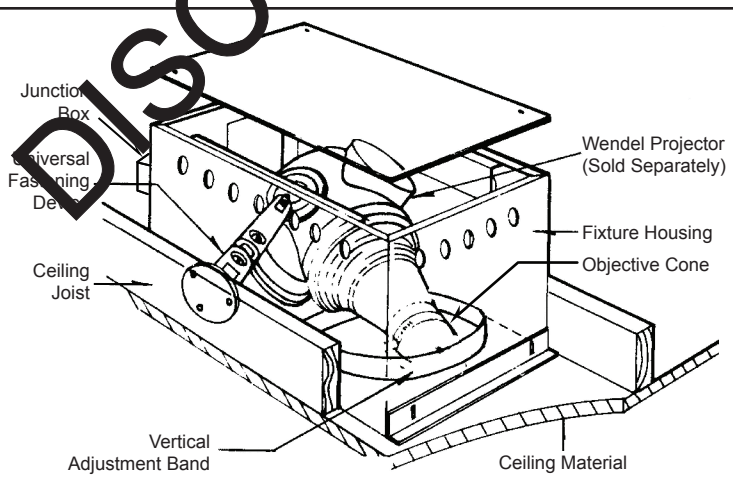

SPECIFICATIONS

Applications:	Plaster Ceilings (Contact Factory for other Types)
Power:	120 VAC
Lamping:	250 Watt Maximum
Weight:	28 lbs.
Housing:	Die Formed Galvanized Sheet Metal
Housing Interior:	Finished Black
Mounting:	Hanger Brackets Rigid to Construction
Trim Plate:	Steel with Galvanized Paint Lock
Trim Retention:	Rare Earth Magnets
Relamping:	Top Access Panel and Bottom Trim Plate
Listing:	UL / CUL Damp Location
	Thermally Protected
	Non IC / Not Air Tight

Approximate Location for the Wendel Projector Housing.
In order to specify the approximate location for a Wendel housing, determine the position of the object to be illuminated and see the following formula:

P = W + 1/3A + 3"
P = Distance of Wendel projector to wall
W = Distance from top of art to ceiling
A = Height of art
CL Housing = P + 3" (additional 3")

Forward information to Wendelighting to verify location

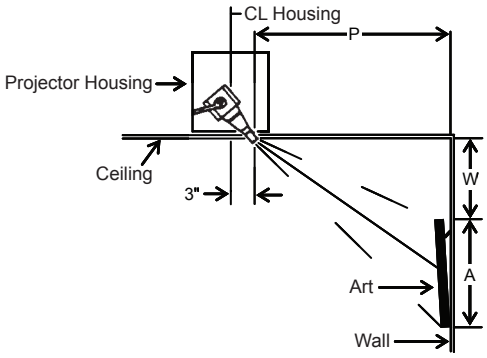

WENDELIGHTING / DIVISION OF JACKSEN INTERNATIONAL LTD. - P.O. BOX 337 - 363 BELL STREET - LOS ALAMOS, CALIFORNIA 93440
(800) 528-0101 Fax (626) 303-0046 www.wendelighting.com e-mail: info@wendelighting.com